https://xtremepape.rs/

Section A
Answer **all** questions in this section.

A sketch of a coffee mug with a square base is shown on the right.

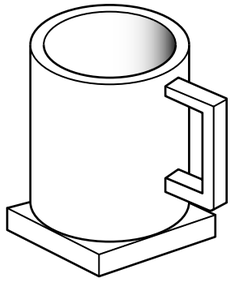

A1 **(a)** Complete the scale 1 : 2 orthographic views of the coffee mug by:

(i) adding the missing lines to the side view; [5]

(ii) adding one dimension to the plan; [2]

(iii) adding the projection symbol in the given box. [3]

side view

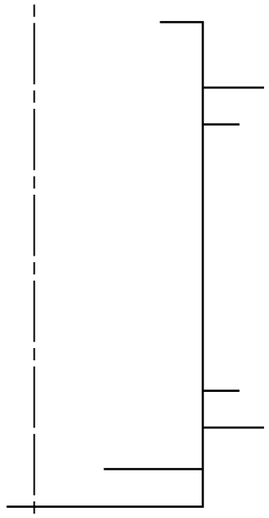

plan

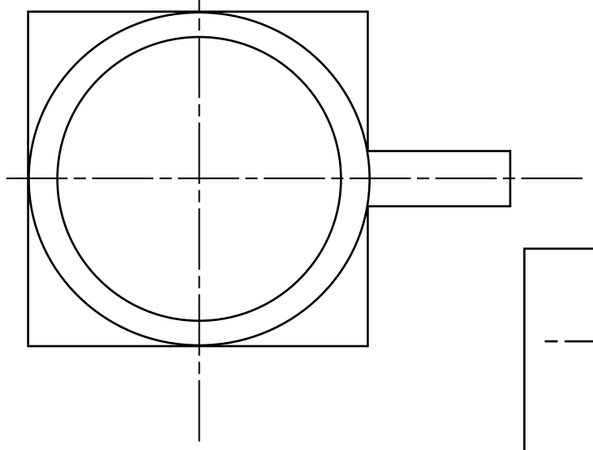

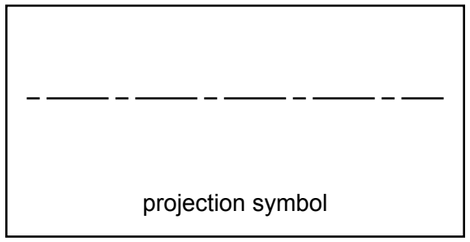

A2 **(a)** Complete the sectional plan view of the coffee mug below. [2]

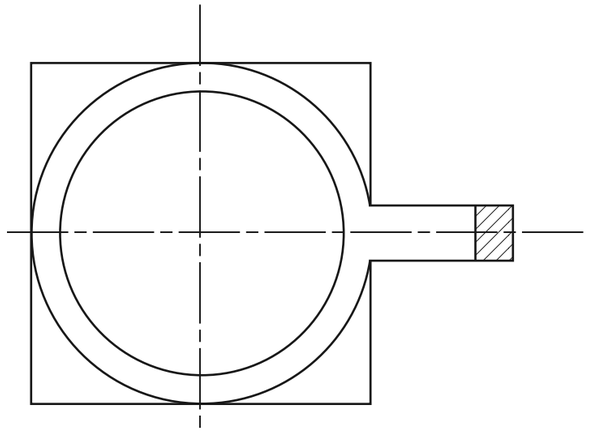

(b) A design is printed on the coffee mug in thermochromic ink. Describe how the thermochromic ink adds interest to the coffee mug.

.....

.....

.....

.....

.....

.....[2]

For Examiner's use

© UCLES 2015 DC (RW/FD) 101706/3

Centre Number ..... Candidate Number ..... Candidate Surname ..... Other Names ..... **[Turn over**

https://xtremepape.rs/

A3 An exploded view of a take away coffee cup is shown below.

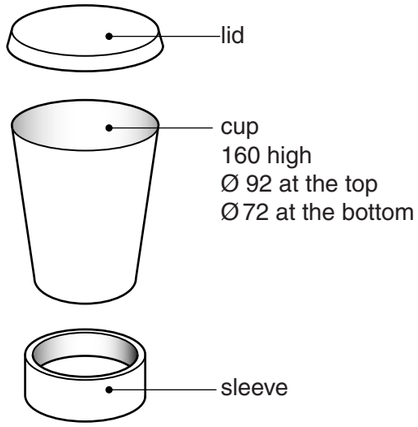

(a) In the space below draw a scale 1 : 2 planometric view of the cup.
Do not include the lid or sleeve. [4]

(b) The lid of the coffee cup is vacuum formed. Describe **three** main steps in the process of vacuum forming.

.....

.....

.....

.....

.....

.....

.....

.....

..... [3]

(c) The sleeve is made from corrugated card.

(i) In the space below draw a sectional view of corrugated card. [2]

(ii) Explain why corrugated card is used for the sleeve.

.....

.....

.....

.....

..... [2]

© UCLES 2015